| REV. | ECN NO. | LOCATIONS | DESCRIPTION | DATE | DESIGN |
|---|---|---|---|---|---|
| A0 | | | NEW RELEASE | 08/01'18 | Larry |

# CUSTOMER DRAWING

## RoHS Compliant

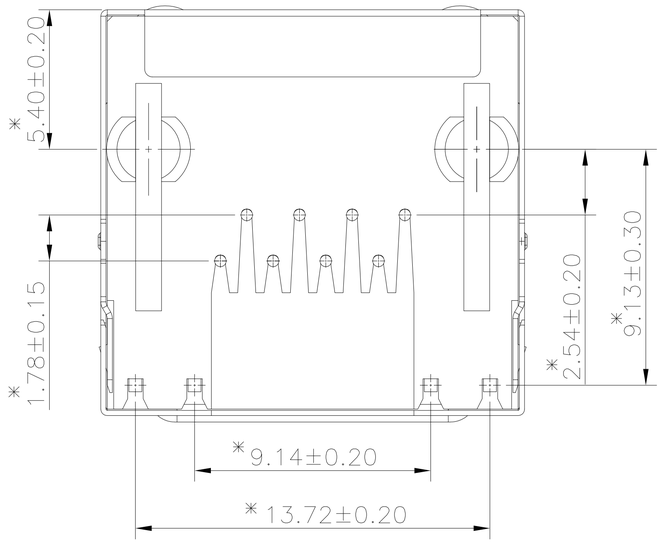


3D VIEW

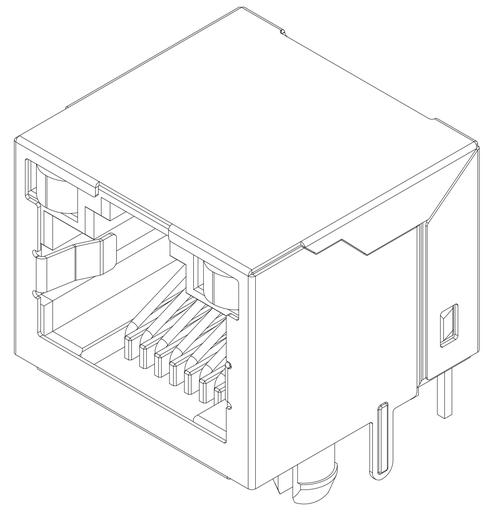

ORDERING INFORMATION

**8N10-R30 1 1 1 ( 01 S )**
1 2 3 4 5 6

1 PRODUCT SERIES:
- RJ45 1x1 CONNECTOR-8P8C
- On board type / H:13.10(Shielded)
- TAP-UP with LED/ Round Pin

2 COLOR OF LED
- 0: W/O LED
- 1: L-yellow, R-green
- 2: L-green, R-yellow
- 3: All green
- 4: L-yellow, R-orange/green
- 5: L-amber, R-green
- 6: L-orange/green, R-green

3 MATERIAL OF HOUSING :
- 1: PBT

4 COLOR OF HOUSING :
- 1: Black
- 2: Yellow
- 3: Blue
- 4: Gray
- 5: White

5 GOLD PLATING :
- 01: Gold Flash.
- 10: 10u"
- 30: 30u".

6 MATERIAL OF SHELL :
- S: Metal Shielding.

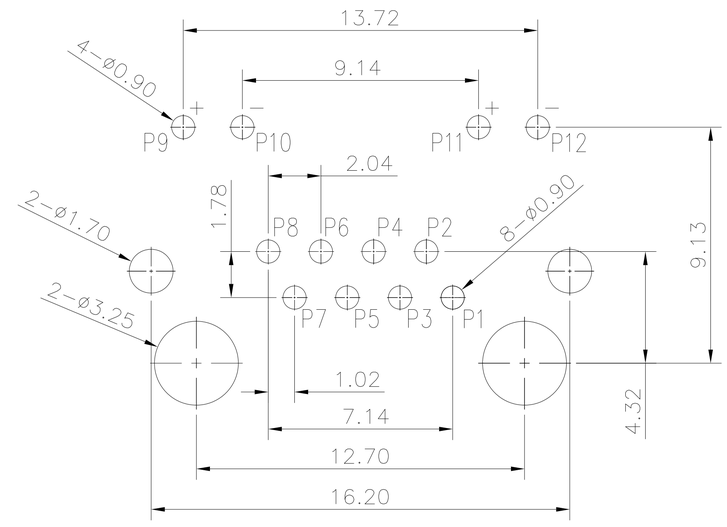


RECOMMENDED PCB LAYOUT

GENERAL TOLERANCE: ±0.05

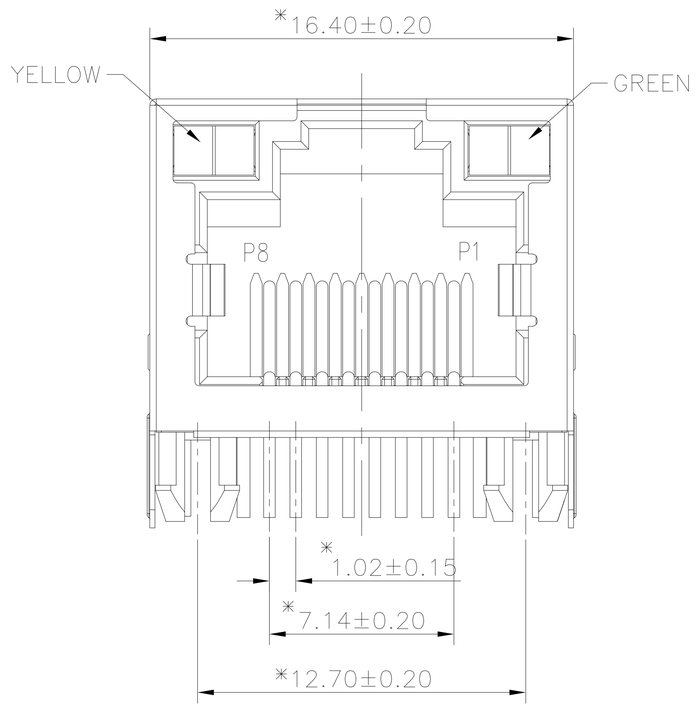


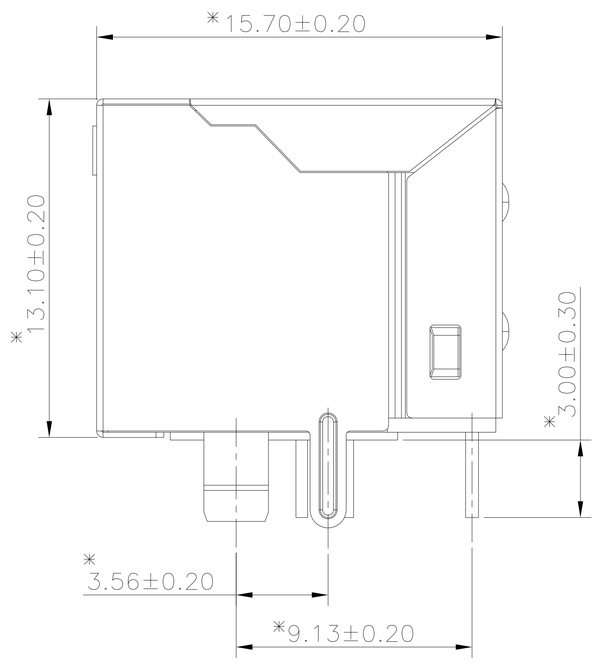


NOTES:
1. MATERIAL:
   (1) HOUSING: PA6T, UL94 V-0, Color:Black.
   (2) CONTACT: COPPER ALLOY.
   (3) Shell: COPPER ALLOY.
2. PLATED:
   (1) CONTACT: 50u" NICKEL UNDERPLEATED OVERALL.
   GOLD PLATED ON CONTACT AREA.
   (2) SHELL: NICKEL PLATED OVERALL.

| DIM | TOL | DIM | TOL |
|---|---|---|---|
| X.X | ±0.35 | X.X° | ±3.0° |
| X.XX | ±0.25 | X.XX° | ±2.0° |
| X.XXX | ±0.15 | X.XXX° | ±1.0° |

| SUNFUN | | SUNFUN TECHNOLOGY LTD | | |
|---|---|---|---|---|
| DRAW NO. | 8N10-R30(A0) | DATE | MATERIAL: SEE NOTES | DRAW NAME: RJ45 1x1 CONNECTOR- On board type / H:13.10(Shielded) TAP-UP with LED |
| DESIGN: | Larry | 08/01'18 | FINISH: SEE NOTES | |
| CHECK: | Larry | 08/01'18 | FILE: 8N10-R30(A0) | MODEL: RJ45 CONN |
| REVIEW: | Ziv | 08/01'18 | P/N: 8N10-R30XXX(XXS) | UNIT: mm / SHEET: 1/1 |
| APPROVED | Ziv | 08/01'18 | REV. A0 SCALE | |