REV.	ECN NO.	LOCATIONS	DESCRIPTION	DATE	DESIGN
A0			NEW RELEASE	10/27'18	Bill

CUSTOMER DRAWING

RoHS Compliant

ORDERING INFORMATION

BCN11 - 011
[1] [2]

[1] PRODUCT SERIES:
Battery Holder.

[2] ITEM NO.:
4.2mm Height/ SMT with post type.

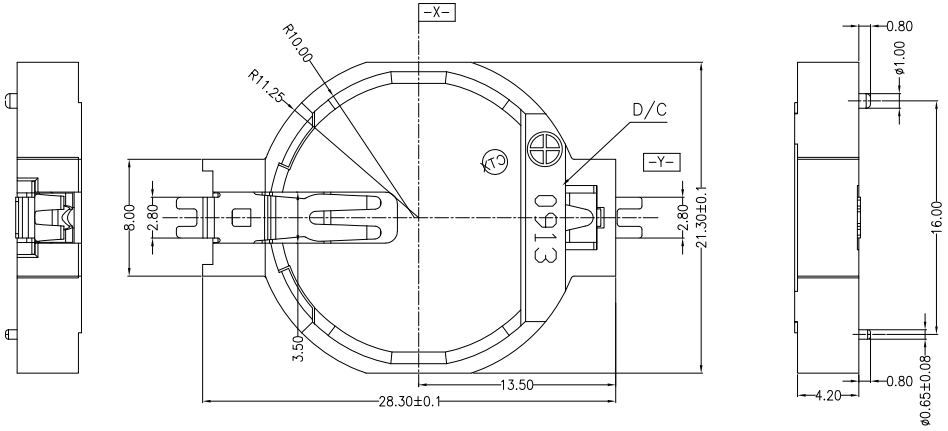

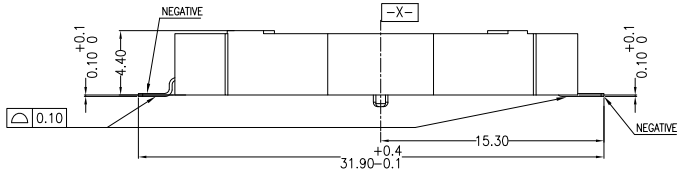

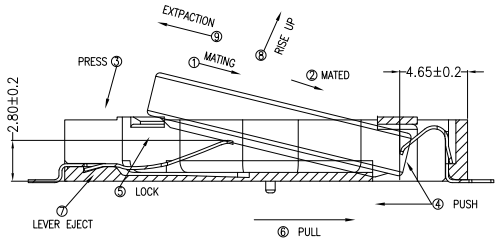

SECTION A-A

HOW TO MATE AND UNMATE

MATE: ① ⟶ ⑤
UNMATE: ⑥ ⟶ ⑨

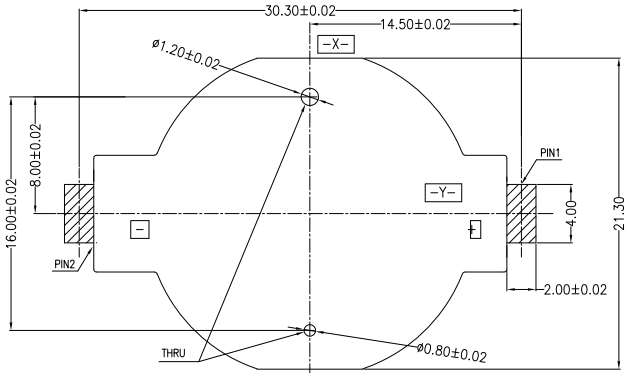

RECOMMENDED PCB LAYOUT(TOP VIEW)

DEFAULT TOLERENCE: ±0.05

NOTES;
1.MATERIAL:
1.1 CONTACT: COPPER ALLOY.
1.2 HOUSING: LCP,UL94-V0,BLACK.
2.FINISH:
2.1 CONTACT AREA: GOLD FLASH OVER 50u"MIN NICKEL.
2.2 SOLDER AREA: GOLD FLASH OVER 50u"MIN NICKEL.
3.ACCORDING TO THE ENVIRONMENTAL REQUIREMENT,WARRANTY THE CONTROLLED HAZARDOUS SUBSTANCE SHOULD BE MEET LOTES'S SPECIFICATION AND HF COMPLIANT.

DIM	TOL	DIM	TOL
X.X	±0.30	X.X°	±3.0°
X.XX	±0.20	X.XX°	±2.0°
X.XXX	±0.10	X.XXX°	±1.0°

SUNFUN		SUNFUN TECHNOLOGY LTD		
DRAW NO.	BCN11-011(A0)	DATE	MATERIAL: SEE NOTES	DRAW NAME: BATTERY HOLDER- 4.2mm Height/ SMT with post type.
DESIGN:	Bill	10/27'18	FINISH: SEE NOTES	
CHECK:	Bill	10/27'18	FILE: BCN11-011(A0)	MODEL: BATTERY HOLDER
REVIEW:	Rui	10/27'18	P/N: BCN11-011	UNIT: mm / SHEET: 1/1
APPROVED	Rui	10/27'18	REV. A0 / SCALE	