REV.	ECN NO.	LOCATIONS	DESCRIPTION	DATE	DESIGN
A0			NEW RELEASE	09/20'20	Jason

CUSTOMER DRAWING

RoHS Compliant

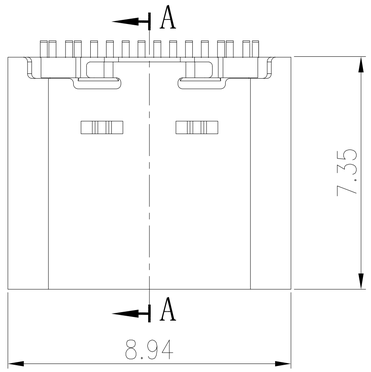

3D VIEW

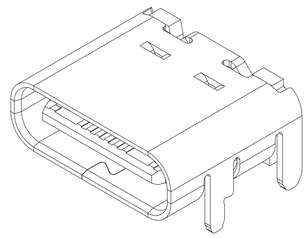

ORDERING INFORMATION

MCCF - R1N4 (XX T)

1 2 3

1 PRODUCT SERIES:
USB C TYPE connector – Receptacle (Female) side.

2 ITEM NO.:
Right Angle– Single Row SMD 16pin + Shell 1.0DIP
Body 7.35L/ Standard on board type.

3 GOLD PLATING :
01: G/F.
15: 15u".
30: 30u".

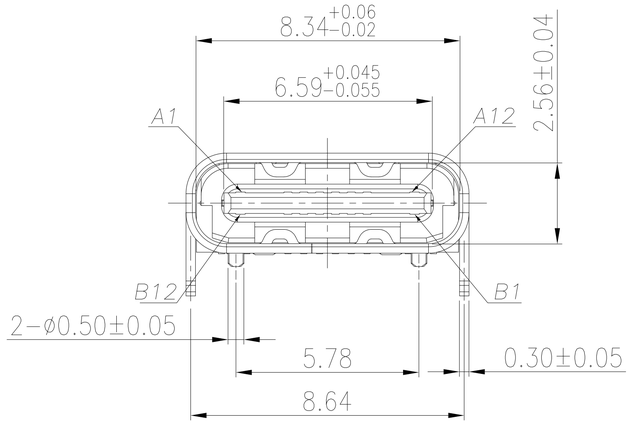

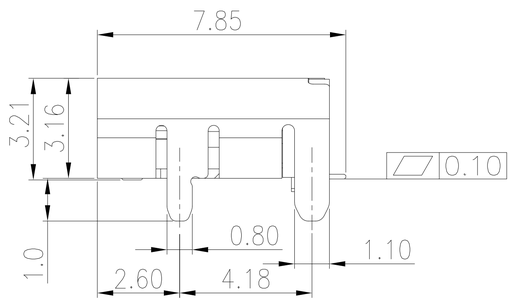

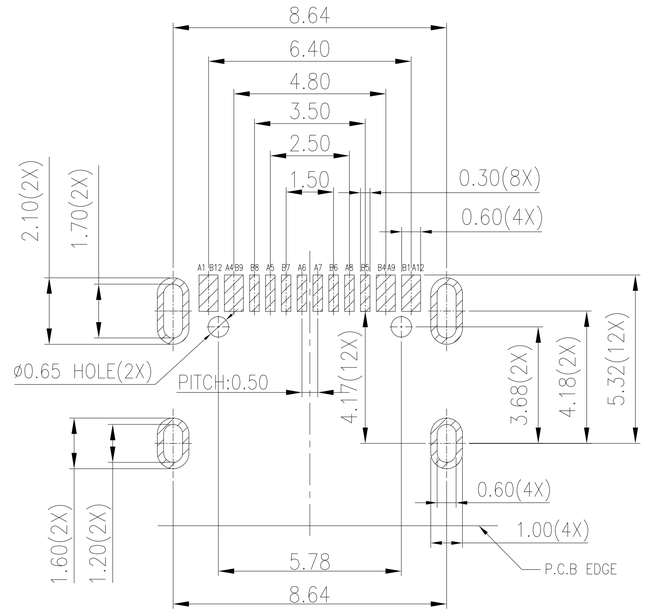

RECOMMENDED P.C.B. LAYOUT
THICKNESS:1.00±0.05mm

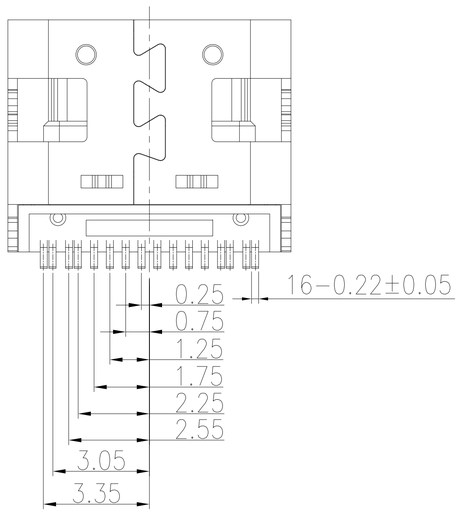

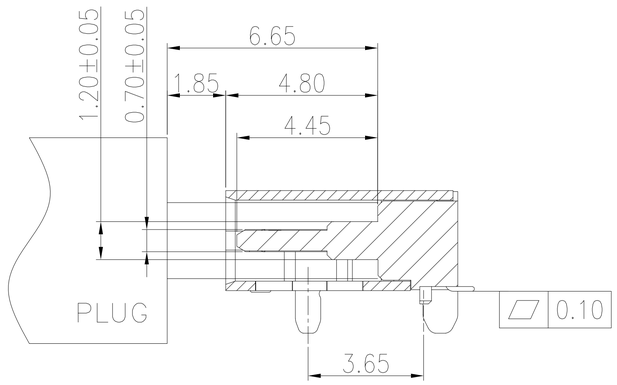

SECTION: A–A

NOTES:

1. MATERIAL:
   (1) HOUSING: HIGH TEMP plastic, UL94 V–0.
   (2) CONTACT: COPPER ALLOY.
   (3) MID PLATE: STAINLESS STEEL.
   (4) SHELL: STAINLESS STEEL.
2. PLATED:
   (1) CONTACT: GOLD ON CONTACT AREA OVER NICKEL PLEATED OVERALL.
   (2) SHELL: NICKEL PLATED OVER ALL.
   (3) MID PLATE: CLEAR ONLY

PIN ASSIGNMENTS

PIN NO.	A1	A4	A5	A6	A7	A8	A9	A12
SIGNAL NAME	GND	VBUS	CC1	Dp1	Dn1	SBU1	VBUS	GND

PIN NO.	B12	B9	B8	B7	B6	B5	B4	B1
SIGNAL NAME	GND	VBUS	SBU2	Dn2	Dp2	CC2	VBUS	GND

DIM	TOL
X.X	±0.30
X.XX	±0.20
X.XXX	±0.10

SUNFUN

SUNFUN TECHNOLOGY LTD

DRAW NO.	MCCF-R1N4(A0)	DATE	MATERIAL: SEE NOTES	DRAW NAME: USB C Type CONN – FEMALE/ RA Single row 16pin + shell 1.0dip Body 7.35L/ Standard on board type
DESIGN:	Jason	09/20'20	FINISH: SEE NOTES	
CHECK:	Jason	09/20'20	FILE: MCCF-R1N4(A0)	
REVIEW:	John	09/20'20	P/N: MCCF-R1N4(XXT)	MODEL: USB C TYPE CONN
APPROVED	John	09/20'20	REV. A0 SCALE	UNIT: mm / SHEET: 1/1