REV.	ECN NO.	LOCATIONS	DESCRIPTION	DATE	DESIGN
A0			NEW RELEASE	07/20'22	Sun

CUSTOMER DRAWING

RoHS Compliant

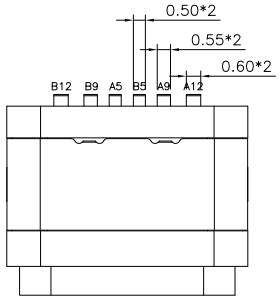

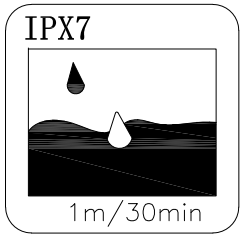

3D VIEW

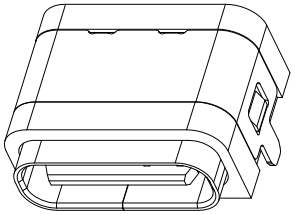

ORDERING INFORMATION

MCCF - YW0N2 (XX T)
1 2 3

1 PRODUCT SERIES:
USB C TYPE connector – Receptacle (Female) side.

2 ITEM NO.:
Right Angle– Single Row 6pin
2Dip+SMD With 2Post/ Waterproof IPX7

3 GOLD PLATING :
01: G/F.

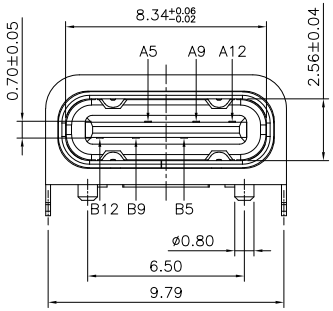

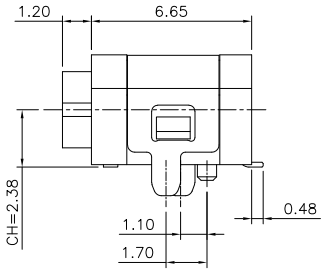

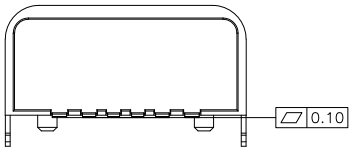

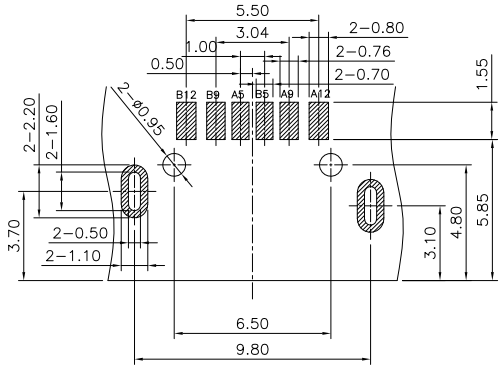

RECOMMENDED P.C.B. LAYOUT
GENERAL TOLERANCE: ±0.05mm

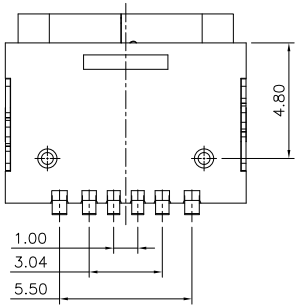

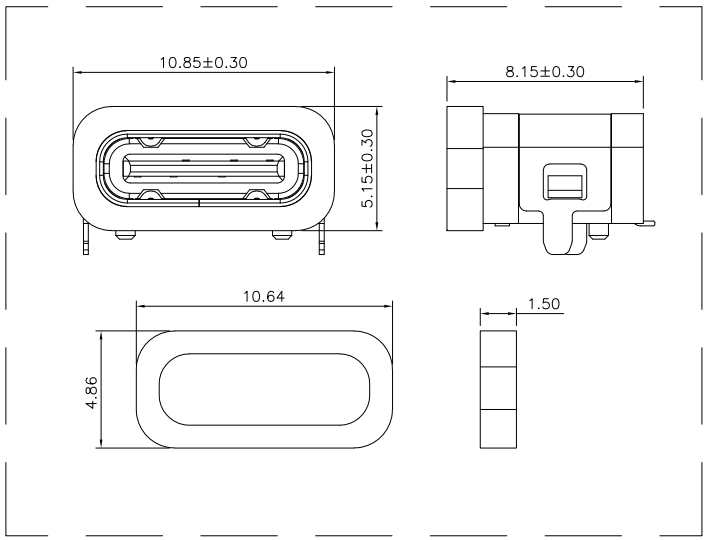

NOTES:
1. MATERIAL:
(1) HOUSING: HIGH TEMP plastic, UL94 V–0.
(2) CONTACT: Copper Alloy.
(3) SHELL: Stainless Steel.
(4) Waterproof Ring: Silicone.
2. PLATED:
(1) CONTACT: GOLD ON CONTACT AREA OVER NICKEL PLEATED OVERALL.
(2) SHELL: NICKEL PLATED OVERALL.
3. SPECIFICATIONS:
(1) CURRENT RATING: 3.0A MAX.
(2) DIELECTRIC WITHSTAND VOLTAGE: 100VAC.
(3) TEMPERATURE RANGE: –40°C ~ +85°C.
(4) CONTACT RESISTANCE: 40 MILLIONHM MAX.
(5) INSERTION FORCE : 5N~20N.
(6) UN–MATING FORCE: 8N~20N.
(7) DURABILITY:10,000 CYCLES.
(8) WATERPROOF: THIS PRODUCT IS BASED ON IPX7.

PIN ASSIGNMENT:

PIN NO	A5	A9	A12	B12	B9	B5
SIGNAL NAME	CC1	VBUS	GND	GND	VBUS	CC2

DIM	TOL	DIM	TOL
X.X	±0.30	X.X°	±3.0°
X.XX	±0.20	X.XX°	±2.0°
X.XXX	±0.10	X.XXX°	±1.0°

SUNFUN	SUNFUN TECHNOLOGY LTD				
DRAW NO.	MCCF-YW0N2(A0)	DATE	MATERIAL: SEE NOTES	DRAW NAME: USB C Type CONN – FEMALE Right Angle/ Single Row 6pin 2Dip+SMD With 2Post/Waterproof IPX7	
DESIGN:	Sun	07/20'22	FINISH: SEE NOTES		
CHECK:	Sun	07/20'22	FILE: MCCF-YW0N2(A0)		
REVIEW:	Rui	07/20'22	P/N: MCCF-YW0N2(XXT)	MODEL: USB C TYPE CONN	
APPROVED	Rui	07/20'22	REV. A0 SCALE	UNIT: mm	SHEET: 1/1